Connector - with screwless terminals for harsh applications

Product description	
BALS-Prd.-Nr	31981
EAN	4024941319812
Product category	QUICK-CONNECT TE connector
Current	32A
Number of poles	5p
Arangement of phases	3p+N+PE
Position of earth contact	6 h
Voltage	200/346 - 240/415V~

Bals-Polska Elektrotechnika Sp. Z o.o. ul. ubniaska 4a, 46-024 Brynica PL
phone: +48 77 4016 210 / fax: +48 77 4016 215 / email: kontakt@bals.pl

Product description	
Frequency	50/60Hz
Protection degree	IP44
Colour code	red RAL 3000
Colour of appliance	Hinged lid red RAL 3000, Enclosure red RAL 3000, Cable gland grey RAL 7035
Connection design	screwless spring terminals with KONTEX-contact
Maximum conductor size	6,0 qmm
Cable entry	with cable gland
Height	199mm
Width	72mm
Depth	99mm
Material of enclosure	Polyamide
Contacts	the contact carrier is made of high temperature resistant material, the contacts are brass nickel plated

Additional technical properties	
	For cable diameter from 13 up to max. 27 mm, MULTI-GRIP cable gland with gasket, integrated cable clamp and additional water evacuation openings

Logistics data	
Weight/pcs	0.384 kg / Piece
Packaging	Bag
Content amount	1 ST

Bals-Polska Elektrotechnika Sp. Z o.o. ul. ubniaska 4a, 46-024 Brynica PL
phone: +48 77 4016 210 / fax: +48 77 4016 215 / email: kontakt@bals.pl

Logistics data	
EAN	4024941319812
Length	99 mm
Width	72 mm
Height	199 mm
Weight	0.385 kg
Volume	1,418.472 ccm
Packaging	Carton
Content amount	10 ST
EAN	4024941828147
Length	325 mm
Width	217 mm
Height	210 mm
Weight	4.046 kg
Volume	13,588.4 ccm

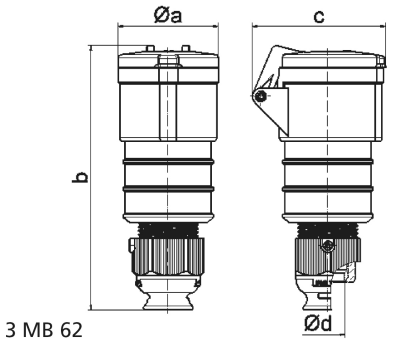

Ampere Polzahl	16 3	16 4	16 5	32 3	32 4	32 5
a ø	51,0	58,0	65,0	66,5	66,5	72,0
b	156,0	162,0	168,0	195,0	195,0	198,0
c	72,0	78,0	86,0	89,0	89,0	99,0
d ø	18,0	18,0	21,0	23,0	23,0	27,0
Leiter mm² min	1	1	1	2,5	2,5	2,5
Leiter mm² max	2,5	2,5	2,5	6	6	6

Bals-Polska Elektrotechnika Sp. Z o.o. ul. ubniaska 4a, 46-024 Brynica PL
phone: +48 77 4016 210 / fax: +48 77 4016 215 / email: kontakt@bals.pl