Connector - INNOLINQ lead-free with QUICK-CONNECT and MULTI-GRIP

Product description	
BALS-Prd.-Nr	300
EAN	4024941347235
Product category	Connector INNOLINQ QUICK-CONNECT
Current	16A
Number of poles	5p
Arangement of phases	3p+N+PE
Position of earth contact	6 h
Voltage	200/346 - 240/415V~

CEE-Norm UK Ltd. Unit 2, Highbridge Court, Stafford Park 1, TF3 3BD Telford UK
phone: +44 1952 212700 / fax: +44 1952 212711 / email: sales@ceenorm.co.uk

Product description	
Frequency	50/60Hz
Protection degree	IP54
Colour code	red RAL 3000
Colour of appliance	Hinged lid dark grey RAL 7012, Collar red RAL 3000, Cable gland dark grey RAL 7012, Housing cover dark grey RAL 7012
Connection design	screwless spring terminals with KONTEX-ULTRA contact
Maximum conductor size	2,5 qmm
Cable entry	with cable gland
Height	171mm
Width	71mm
Depth	94mm
Material of enclosure	Polyamide
Contacts	the contacts are brass, the contact carrier is made of high temperature resistant material

Additional technical properties	
	this product is without any lead
	MULTI-GRIP cable gland with gasket and integrated strain relief, Screwless housing connection with snap fastening, For cable diameter from 10 up to max. 21 mm

Logistics data	
Weight/pcs	0.2 kg / Piece

CEE-Norm UK Ltd. Unit 2, Highbridge Court, Stafford Park 1, TF3 3BD Telford UK
phone: +44 1952 212700 / fax: +44 1952 212711 / email: sales@ceenorm.co.uk

Logistics data	
Packaging	Carton
Content amount	10 ST
EAN	4024941347242
Length	258 mm
Width	183 mm
Height	212 mm
Weight	2.152 kg
Volume	8,750 ccm

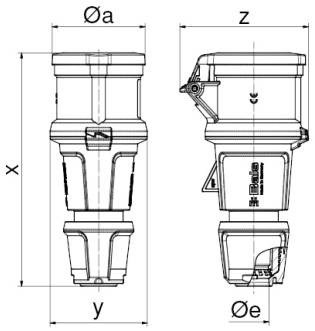

Ampere Polzahl	16 3	16 5	32 3	32 4	32 5
ø a	55,0	68,0	69,0	69,0	76,0
x	157,0	171,0	205,0	205,0	205,0
y	59,0	71,0	80,0	80,0	80,0
z	80,0	94,0	99,0	99,0	105,0
ø e	18,0	21,0	29,0	29,0	29,0
Cond. mm² min	1	1	2,5	2,5	2,5
Cond. mm² max	2,5	2,5	6,0	6,0	6,0

CEE-Norm UK Ltd. Unit 2, Highbridge Court, Stafford Park 1, TF3 3BD Telford UK
phone: +44 1952 212700 / fax: +44 1952 212711 / email: sales@ceenorm.co.uk