Combination wall mounting socket outlet - with terminals ready wired for installation

Product description	
BALS-Prd.-Nr	1010-QC
EAN	4024941948838
Product category	Combined wall mounting socket outlet QUICK-CONNECT
Current	16A
Number of poles	5p
Arangement of phases	3p+N+PE
Position of earth contact	6 h
Voltage	200/346 - 240/415V~

CEE-Norm UK Ltd. Unit 2, Highbridge Court, Stafford Park 1, TF3 3BD Telford UK
phone: +44 1952 212700 / fax: +44 1952 212711 / email: sales@ceenorm.co.uk

Product description	
Frequency	50/60Hz
Protection degree	IP44
Colour code	red RAL 3000
Colour of appliance	Hinged lid red RAL 3000, Housing bottom grey RAL 7035, Housing top grey RAL 7035, Collar grey RAL 7035
Connection design	screwless spring terminals with KONTEX-contact
Maximum conductor size	4,0 qmm
Cable entry	1xM25 top, 2xM25 bottom
Height	154mm
Width	83mm
Depth	130mm
Dimension of enclosure	126x83 mm (HxW)
Material of enclosure	plastic
Contacts	the contact carrier is made of polyamide, the contacts are brass

Additional technical properties	
	The cable entry is one at top open and two at bottom closed, With integrated Schuko-type socket outlet 16A 230V AC German standard
	4 cut out fixing holes in the lower part of housing
	With 3x6mm² terminals with wiring

CEE-Norm UK Ltd. Unit 2, Highbridge Court, Stafford Park 1, TF3 3BD Telford UK
phone: +44 1952 212700 / fax: +44 1952 212711 / email: sales@ceenorm.co.uk

Logistics data	
Weight/pcs	0.462 kg / Piece
Packaging	Bag
Content amount	1 ST
EAN	4024941948838
Length	130 mm
Width	83 mm
Height	154 mm
Weight	0.463 kg
Volume	1,661.66 ccm
Packaging	Carton
Content amount	10 ST
EAN	4024941959261
Length	330 mm
Width	216 mm
Height	260 mm
Weight	4.846 kg
Volume	17,062.5 ccm

CEE-Norm UK Ltd. Unit 2, Highbridge Court, Stafford Park 1, TF3 3BD Telford UK
phone: +44 1952 212700 / fax: +44 1952 212711 / email: sales@ceenorm.co.uk

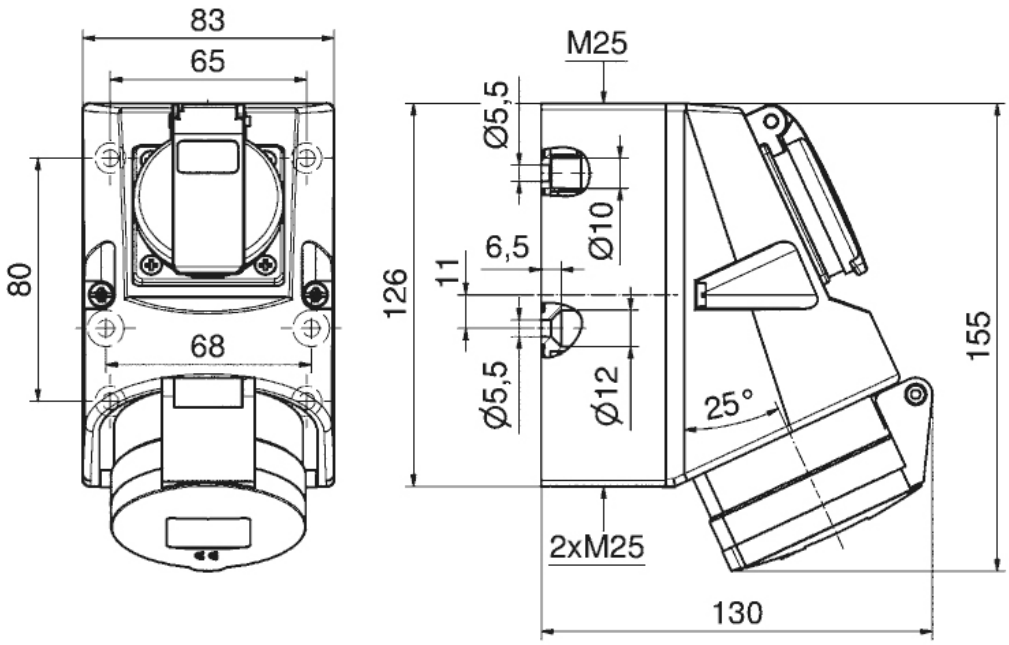

1 MB 122

CEE-Norm UK Ltd. Unit 2, Highbridge Court, Stafford Park 1, TF3 3BD Telford UK
phone: +44 1952 212700 / fax: +44 1952 212711 / email: sales@ceenorm.co.uk